Norton®

ASSA ABLOY

**CAUTION**

**An incorrectly installed or improperly adjusted door closer can cause property damage or personal injury. These instructions should be followed to avoid the possibility of misapplication or misadjustment.**

# Power Track® Series
# Master Unit – PTDO (with detector)
# Support Unit - PTO (without detector)

## Models

| Hinge (Pull) Side of Door Application | Stop (Push) Side of Door Application |
|---|---|
| **7705PTDO** | **P7705PTDO** |
| **7705PTO** | **P7705PTO** |

**NOTES: -** For wiring of PTDO models, see "PowerTrack®" "Wiring Instructions" **No. 80-9342-0902-021 (01-09)**
**-** When used with a PTDO model, PTO unit must be a 24V unit

# Installation Instructions

Combination Door Closer-Holder and Releasing Device WITH and WITHOUT Integral Smoke Detector

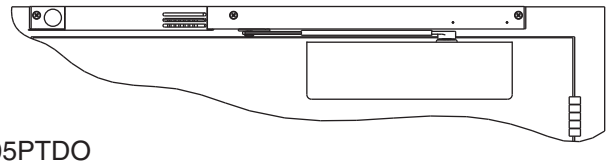

7705PTDO
PULL SIDE
illustrated
**LH – Left Hand Door**
**RHR – Right Hand Reverse**

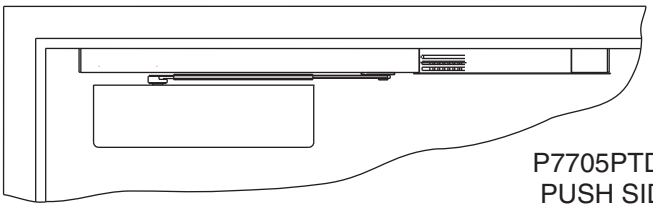

P7705PTDO
PUSH SIDE
illustrated
**LH – Left Hand Door**
**RHR – Right Hand Reverse**

PTO UNITS NOT SHOWN

## Components:

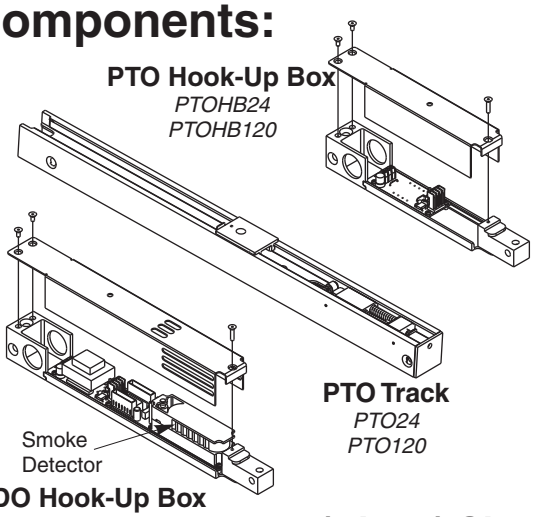


**Pull (Hinge) Side**

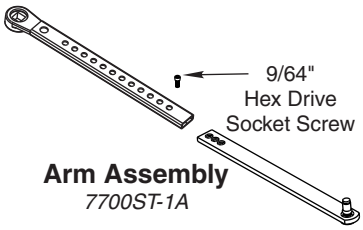


**Arm Assembly**
*7700ST-1A*

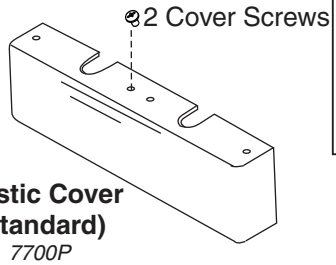


**Plastic Cover (Standard)**
*7700P*

| Preparation for Fasteners | | | |
|---|---|---|---|
| | Fasteners | Door or Frame | Drill-Sizes |
| Standard | Self-Drilling Screw | Aluminum or Metal | No drill required |
| | | Wood | 3/16" (4.30 mm) Pilot hole required |
| | 1/4" - 20 machine screw | Metal | Drill: #7 (0.201" dia.) Tap: 1/4" - 20 |
| Optional | Sleeve nuts and bolts | Hollow Metal | 9/32" (7 mm) through; 3/8" (9.5 mm) door face opposite to closer |
| | | Aluminum or Wood | 3/8" (9.5 mm) through |
| | Through-bolts and grommet-nuts | All | 9/32" (7 mm); 3/8" (9.5 mm) dia. x 3/8" (9.5 mm) deep on door opposite to closer |

**Metal Cover with Clips**
*7700M* *

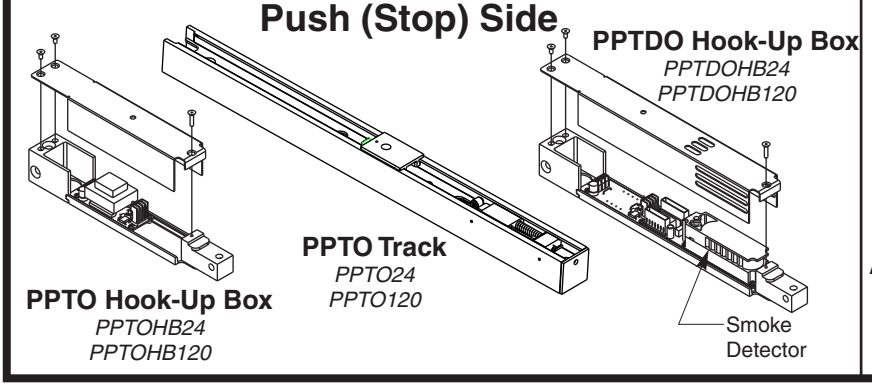


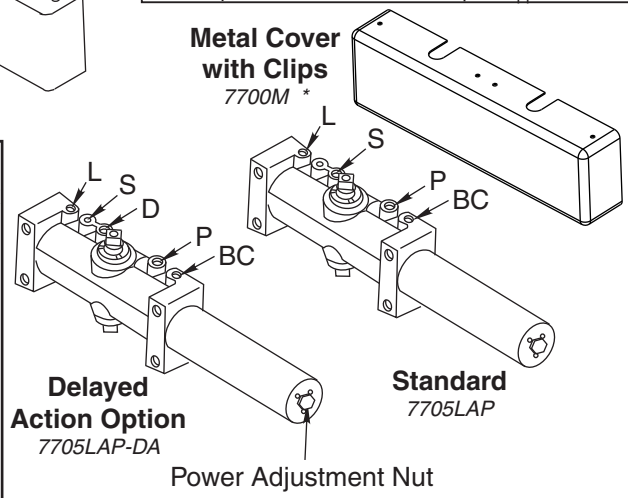


**Delayed Action Option**
*7705LAP-DA*

**Standard**
*7705LAP*

* This cover is only available for PULL SIDE applications.

**NOTE:**

- For special applications a separate door and frame preparation template is packed with these instructions.
- Use this instruction sheet for installation sequence and closer adjustments only.
- Use of an auxiliary door stop is always recommended.
- Unit must be mounted on interior of building in dry environment, maximum humidity of 95%.
- See NFPA70 for wiring requirements and NFPA72 for alarm system requirements.

Copyright © 2009, 2014 Yale Security Inc., an ASSA ABLOY Group company. All rights reserved.
Reproduction in whole or in part without the express written permission of Yale Security Inc. is prohibited.

ASSA ABLOY, the global leader in door opening solutions

80-9377-0716-020 (04-14)

# 7705PTO/7705PTDO Series

## Hinge (Pull) Side Application

Norton
ASSA ABLOY

### Parts 1

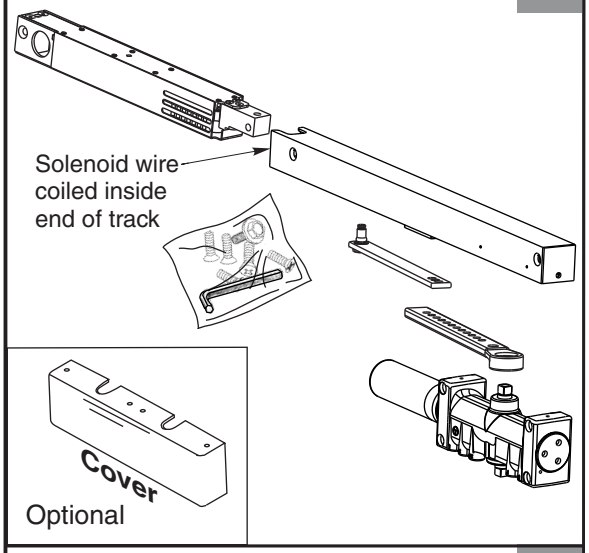


### Mark and Drill Holes 2

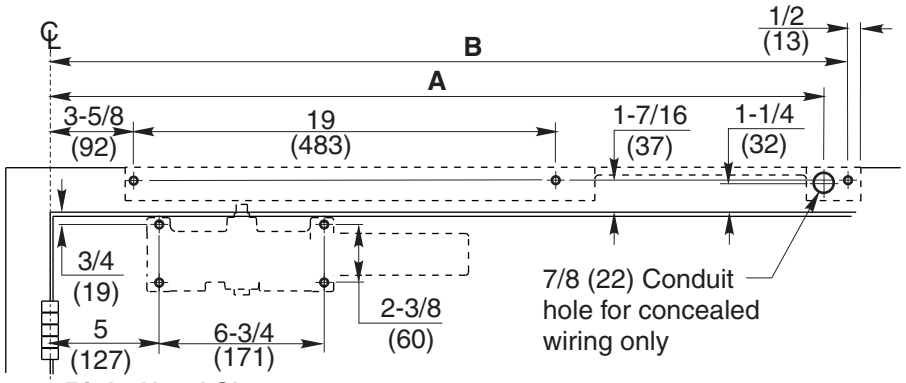


***Right Hand Shown***

| Power Track | Dim. "A" | Dim. "B" |
|---|---|---|
| PTO | 31-1/16 (788) | 32-1/8 (816) |
| PTDO | 34-11/16 (881) | 35-3/4 (908) |

**Preparation for Fasteners**

| Fasteners | Door or Frame | Drill Sizes |
|---|---|---|
| Self-Drilling Screw | Aluminum or Metal | No drill required |
| | Wood (see Note) | 3-16" (4.3mm) |
| 1/4"-20 machine screw | Metal | Drill #7 (.201" dia) Tap 1/4"-20 |

**Note:** Wood doors/frames **MUST** have pilot hole when using Self-Drilling Screws.

### Installation Sequence 3

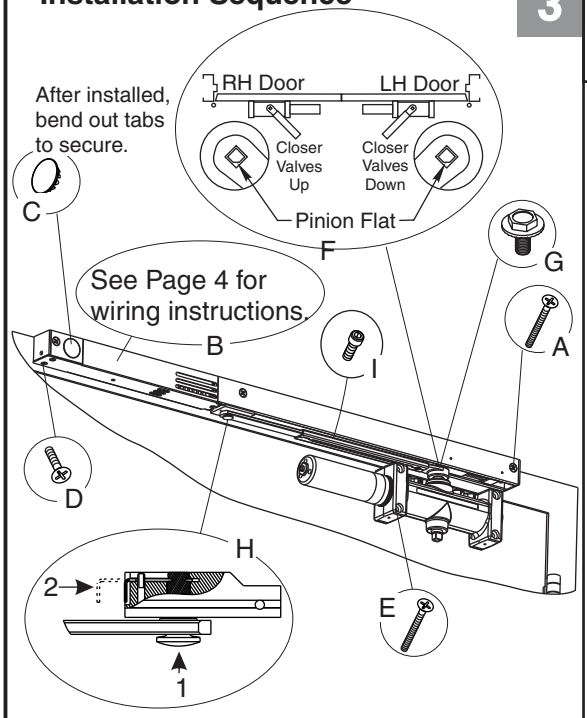


### Sweep 4

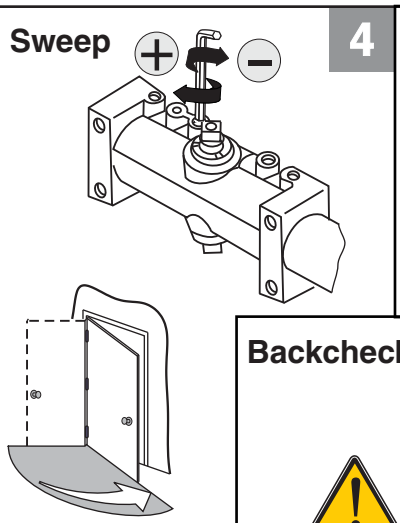

### Latch 5

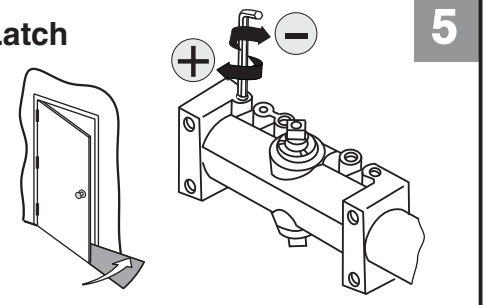

### Backcheck 6

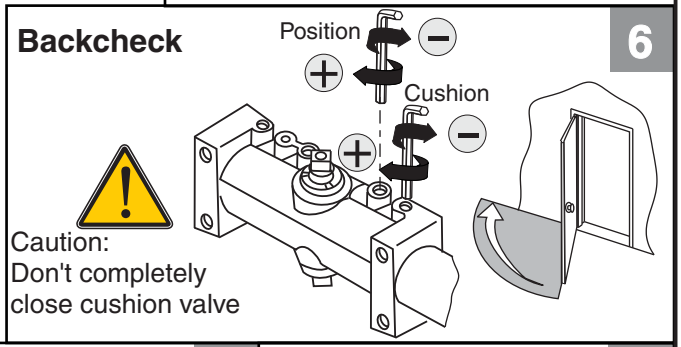


Caution:
Don't completely close cushion valve

### Hold Open Angle 7
**(Between 85° and 110° only)**

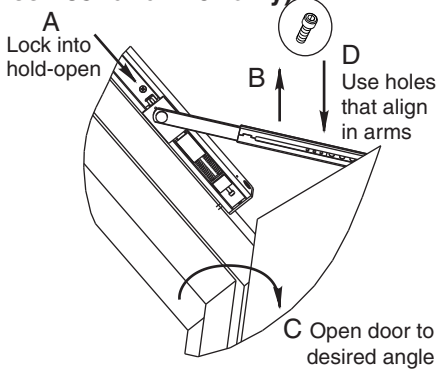


### Closing Force 8

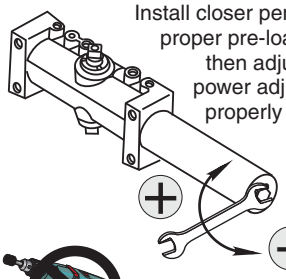

Install closer per instructions with the proper pre-load applied to the arm then adjust spring power. The power adjustment will not work properly if the closer spring is not pre-loaded.

Product shipped with closing force set at the middle of the power range.

**DO NOT use a power drill or driver to turn adjustment nut. This will damage closer and void warranty.**

### Optional Cover 9

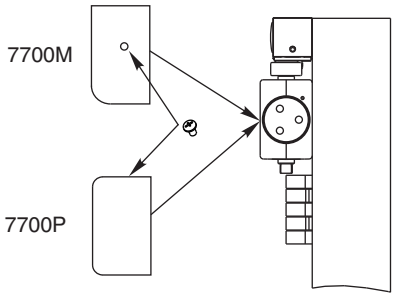


Copyright © 2009, 2014 Yale Security Inc., an ASSA ABLOY Group company. All rights reserved.
Reproduction in whole or in part without the express written permission of Yale Security Inc. is prohibited.



ASSA ABLOY, the global leader in door opening solutions

80-9377-0716-020 (04-14)

# P7705PTO/P7705PTDO Series

## Stop (Push) Side Application

Norton
ASSA ABLOY

### Parts 1

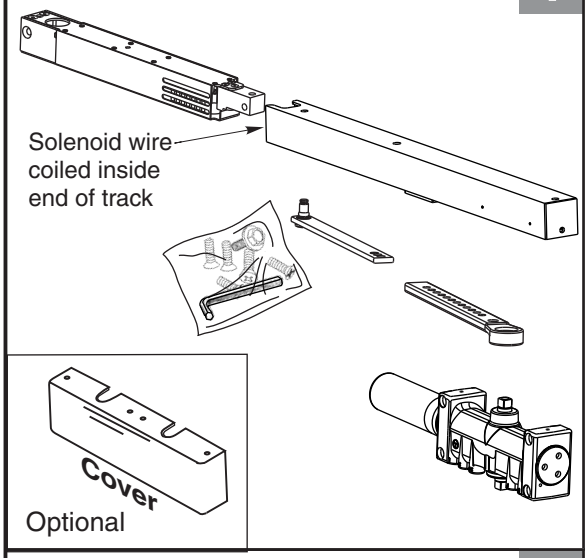


### Mark and Drill Holes 2

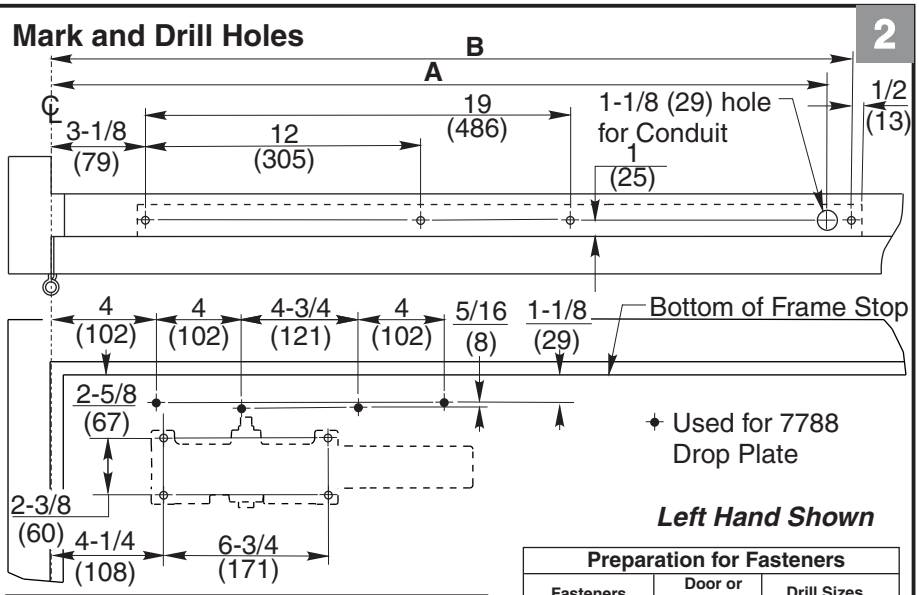


***Left Hand Shown***

| Power Track | Dim. "A" | Dim. "B" |
|---|---|---|
| PTO | 30-9/16 (776) | 31-11/16 (805) |
| PTDO | 34-3/16 (868) | 35-5/16 (897) |

| Preparation for Fasteners | | |
|---|---|---|
| **Fasteners** | **Door or Frame** | **Drill Sizes** |
| Self-Drilling Screw | Aluminum or Metal | No drill required |
| | Wood (see Note) | 3-16" (4.3mm) |
| 1/4"-20 machine screw | Metal | Drill #7 (.201" dia) Tap 1/4"-20 |
| **Note:** Wood doors/frames **MUST** have pilot hole when using Self-Drilling Screws. | | |

### Installation Sequence 3

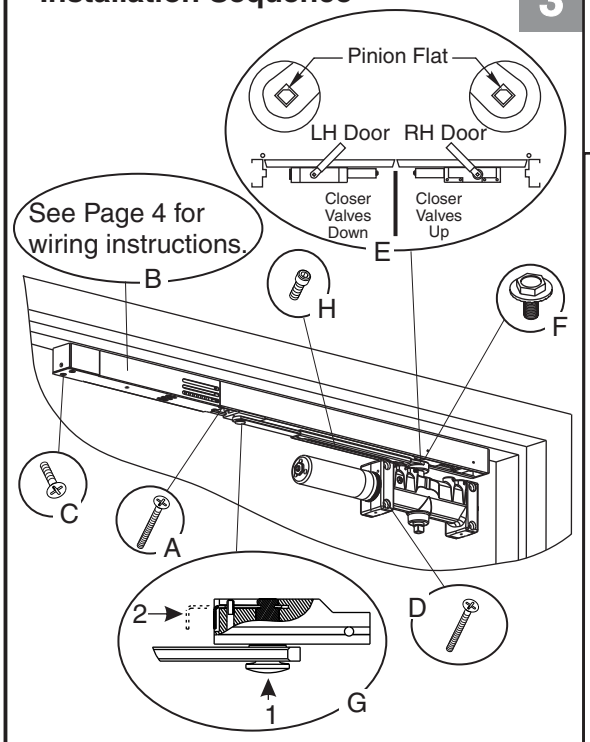


### Sweep 4

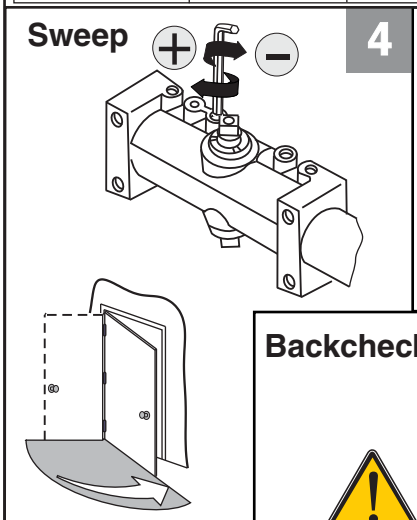

### Latch 5

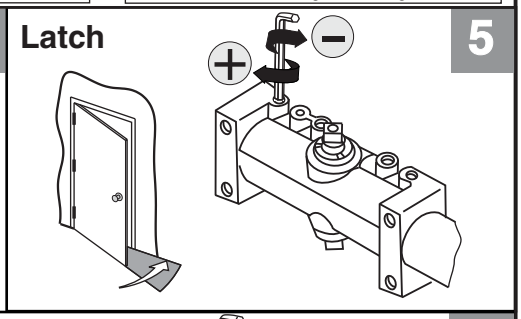

### Backcheck 6

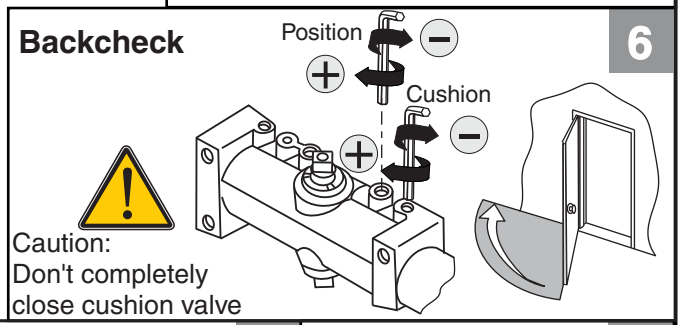


### Hold Open Angle

**(Between 85° and 110° only)**

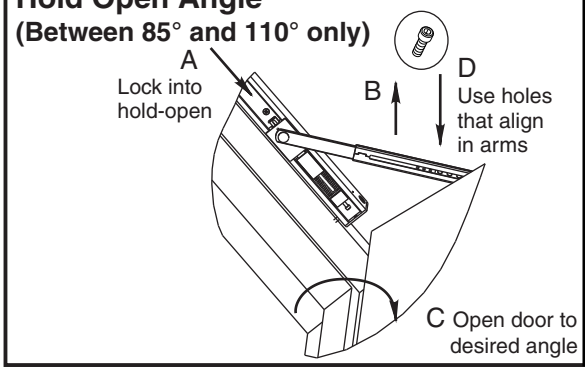


### Closing Force 8

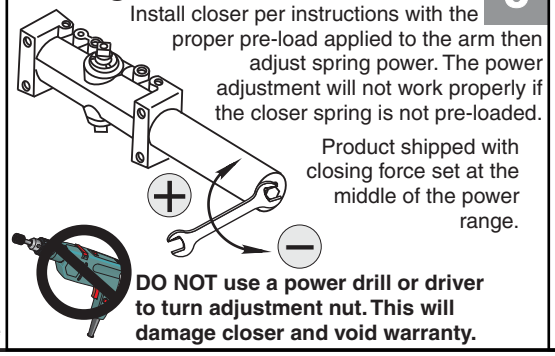

Install closer per instructions with the proper pre-load applied to the arm then adjust spring power. The power adjustment will not work properly if the closer spring is not pre-loaded.

Product shipped with closing force set at the middle of the power range.

**DO NOT use a power drill or driver to turn adjustment nut. This will damage closer and void warranty.**

### Optional Cover 9

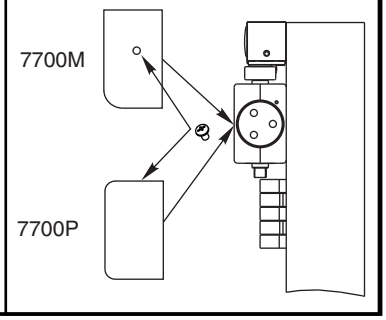


Copyright © 2009, 2014 Yale Security Inc., an ASSA ABLOY Group company. All rights reserved.
Reproduction in whole or in part without the express written permission of Yale Security Inc. is prohibited.



ASSA ABLOY, the global leader in door opening solutions

80-9377-0716-020 (04-14)

## PTO Support Unit Wiring Diagram (24VAC/DC Input)

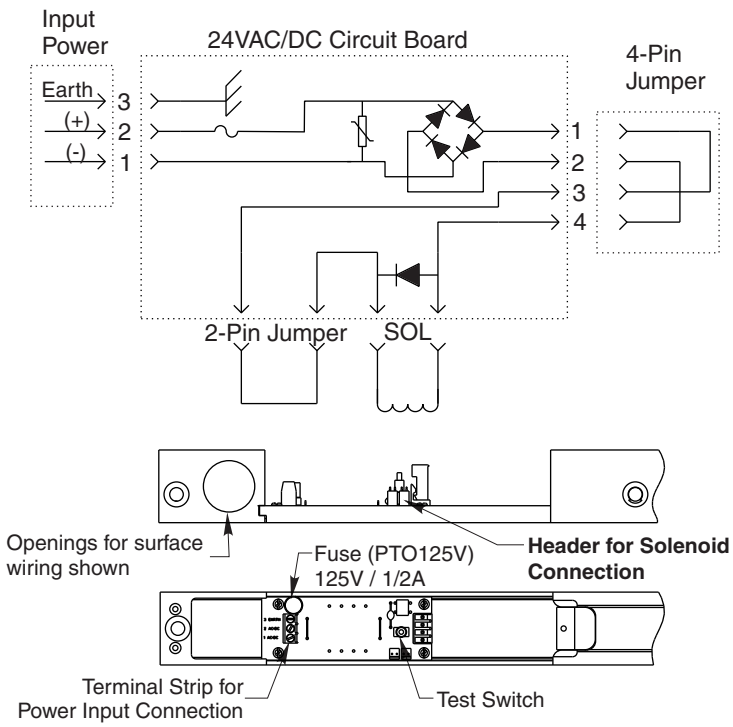


## PTO Support Unit Wiring Diagram (120VAC Input)

**(Do not use a 120VAC PTO unit when power is supplied from a PTDO unit)**

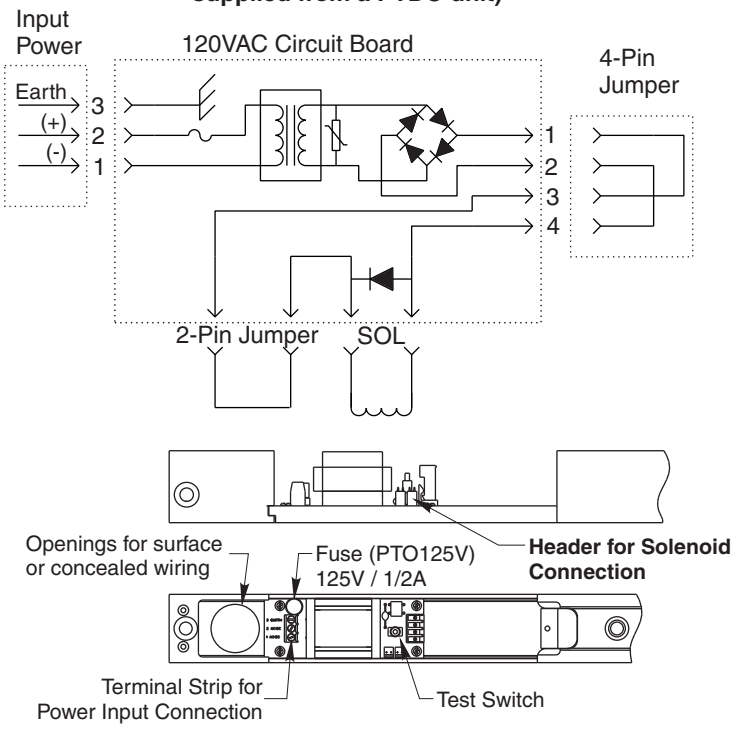


## For PTDO Models:

Refer to Wiring Instructions No. 80-9342-0902-021 (01-09) for making wiring connections.

### ELECTRICAL DATA

| | 120VAC | 24VAC | 24VDC | Detector |
|---|---|---|---|---|
| Voltage | 120V 132V Max 102V Min | 24V 26.4V Max 20.4V Min | 24V 26.4V Max 20.4V Min | 24V 26.4V Max 20.4V Min |
| Current | .036 Amps | .059 Amps | .074 Amps | 0.034 Amps |

NOTES:
- Maximum wire size is 14AWG.
- All wiring and connections use standard wiring practice conforming with local wiring codes.

**IMPORTANT:**
**Remove solenoid wire from end of track** before installing track to frame. Do not pinch or crimp wire. Once track and hook-up box are installed, solenoid wire must be plugged into Header on circuit board shown above.

**After making all wiring connections:**
- Turn power to unit **"ON"**. (On Master (PTDO) unit only, red LED should illuminate once every 15 sec.).
- Track's hold open force is preset at the factory.
- Open door to hold-open position. Manually pull door out of hold-open and release...door should close. If arm does not release from hold-open, increase the releasing force by turning the screw accessible thru the end cap of the track using the 9/64" hex wrench provided.
- Again, open door to the hold-open position. Depress **"Test Switch"** button on the hook-up board (accessible through cover)...door should close. If arm does not release, see previous step.

**Installation of Cover:**
- **Plastic Cover (7700P):** Slide cover insert into the un-used cutout in cover. Install cover using screws provided.
- **Metal Cover (7700M):** Fasten cover to mounting clips with screws provided.


Norton
ASSA ABLOY
3000 Highway 74 East • Monroe, NC 28112
Tel: (877)-974-2255 • Fax: (800)-338-0965
www.nortondoorcontrols.com



Copyright © 2009, 2014 Yale Security Inc., an ASSA ABLOY Group company. All rights reserved.
Reproduction in whole or in part without the express written permission of Yale Security Inc. is prohibited.




ASSA ABLOY, the global leader in door opening solutions


80-9377-0716-020 (04-14)